
Oil-injected Screw Compressor – 50Hz
Fixed speed CPM60-180 & CPD60 G-CPE120
Variable speed CPMV60-180 PM& CPVS60-120 PM
www.cp.com
CPM75
www.cp.com
CPVS100 PM
People. Passion. Performance.
Chicago Pneumatic

CPM60-180/45-132kW
CPD60 G-CPE120/45-90kW series

FIXED SPEED COMPRESSOR

For Chicago Pneumatic, it isn't just about products.
We value our end users' and distributors' performance, and do our ultimate best to make it easy to work with us while providing reliable products with a passion.

This is how we keep you productive at all times, meeting the needs of professionals in vehicle service, general industry and construction around the globe.

People. Passion. Performance.



High performance components made for CPM, CPD & CPE series

Pioneering components make for a revolutionary range



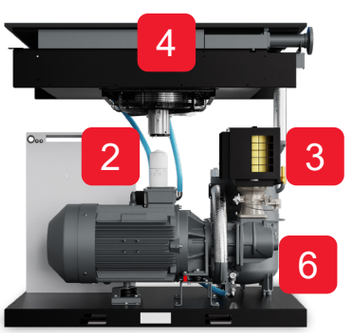



1 Controller
2 Oil filter
3 Air filter
4 Air cooler, Oil cooler
5 Oil-separator vessel
6 Screw element



Separate coolers

Separate oil and air cooler for high-quality cooling. Perfect work at 46°C ambient temperature

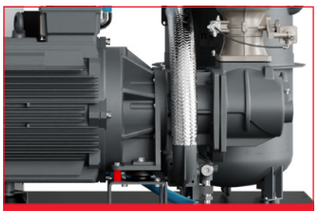

Chicago Pneumatic in-house design element

Guarantee the quality of compressed air and efficient operation



High efficiency air filter

Low pressure drop, less noise and 99.9% removal efficiency at 3μm solid particles



Bionic design of fan

Lower wind drag and lower the noise by latest eagle wing-type fan install

Technical data

Model	Working Pressure	Max pressure	Motor Power		Capacity FAD*		Noise Level	Dimensions	Weight	Connection
	mpa	mpa	kW	hp	l/s	cfm	dB(A)	L x W x H(mm)	kg	Size
CPM60	0.7	0.75	45	60	132	280	72	1723*980*1600	866	G1 1/2"
	0.8	0.85			127	269				
	1	1.05			118	250				
	1.3	1.30			101	213				
CPM75	0.7	0.75	55	75	172	364	75	1656*1089*1840	1100	G2"
	0.8	0.85			161	340				
	1	1.05			142	301				
CPM100	0.7	0.75	75	100	227	481	74	1756*1089*1840	1285	G2"
	0.8	0.85			214	454				
	1	1.05			190	403				
CPM120	0.7	0.75	90	120	279	590	75	1756*1089*1840	1400	G2"
	0.8	0.85			265	561				
	1	1.05			236	501				
CPM150	0.7	0.75	110	150	343	726	80	2052x1325x2000	1725	DN80
	0.8	0.85			328	695				
	1	1.05			289	611				
	1.25	1.30			259	549				
CPM180	0.7	0.75	132	180	402	852	80	2052x1325x2000	2015	DN80
	0.8	0.85			383	810				
	1	1.05			340	719				
	1.25	1.30			304	645				

Model	Working Pressure	Max pressure	Motor Power		Capacity FAD*		Noise Level	Dimensions	Weight	Connection
	mpa	mpa	kW	hp	l/s	cfm	dB(A)	L x W x H(mm)	kg	Size
CPD60 G	0.7	0.75	45	60	133	281	70	1723*980*1600	906	G1 1/2"
	0.8	0.85			133	281				
	1	1.05			114	241				
	1.3	1.30			100	211				
CPE75	0.7	0.75	55	75	187	396	75	1656*1089*1840	1110	G2"
	0.8	0.85			177	375				
	1	1.05			153	325				
	1.25	1.30			137	289				
CPE100	0.7	0.75	75	100	248	526	74	1756*1089*1840	1295	G2"
	0.8	0.85			235	498				
	1	1.05			204	433				
	1.25	1.30			177	375				
CPE120	0.7	0.75	90	120	282	598	75	1756*1089*1840	1300	G2"
	0.8	0.85			269	570				
	1	1.05			240	508				
	1.25	1.30			207	438				

**Unit performance measured according to ISO 1217. Annex C. latest edition and ISO 2151.*

CPMV60-180 PM/45-132kW
CPVS60-120 PM/45-90kW

VARIABLE SPEED COMPRESSOR

Excel at operational efficiency and performance

Continuous investment in product development has resulted in our most innovative and energy efficient compressor to date. Designed with the customer in mind, the CPMV PM & CPVS PM range delivers premium performance at a minimal energy cost.

With the products, reliable productivity becomes a given. Maintenance-free components enable higher uptime and consumables with a long lifetime ensure low total cost of ownership. Last but not least, this range offers you peace of mind, packaged in a proven canopy design with already thousands of installations around the globe.





Imperium inverter

In-house designed Imperium inverter ensures perfect match between air demand and air supply.

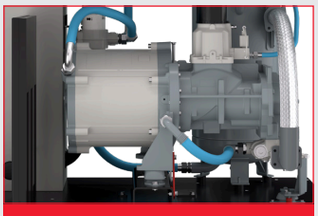

Oil-cooled PM drive train

Reliable and high efficiency drive train: unique design, lower fabrication to reduce energy loss and optimize operation cost



ES4000T controller

Easy-to-use, graphical touch screen display with integrated connectivity to optimize and save energy

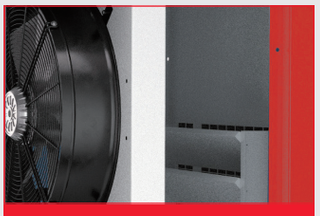

Integrated fan

Start/stop coordinated by controller in accordance with the oil temperature

Technical data

Model	Working Pressure	Max pressure	Motor Power		Capacity FAD*		Noise Level	Dimensions	Weight	Connection
	mpa	psig	kW	hp	l/s	cfm	dB(A)	L x W x H(mm)	kg	Size
CPMV60 PM	0.7-1.0	100-145	45	60	28-142	60-300	74	1723*980*1600	750	G1 1/2"
CPMV75 PM	0.70-0.85	100-123	55	75	43-183	92-388	75	1656*1089*1840	840	G2"
	1.00-1.05	145-152			38-157	81-332				
CPMV100 PM	0.70-0.85	100-123	75	100	52-210	109-445	79	1656*1089*1840	865	G2"
	1.00-1.05	145-152			47-182	99-385				
CPMV120 PM	0.70-0.85	100-123	90	120	67-288	141-611	77	1756*1089*1840	1080	G2"
	1.00-1.05	145-152			60-240	127-509				
CPMV150 PM	0.70-0.85	100-123	110	150	87-340	184-720	80	2052x1325x2000	1490	DN80
	1.00-1.30	145-189			102-287	215-607				
CPMV180 PM	0.70-0.85	100-123	132	180	98-402	208-851	80	2052x1325x2000	1580	DN80
	1.00-1.30	145-189			102-340	215-720				

Model	Working Pressure	Max pressure	Motor Power		Capacity FAD*		Noise Level	Dimensions	Weight	Connection
	mpa	psig	kW	hp	l/s	cfm	dB(A)	L x W x H(mm)	kg	Size
CPVS60 PM	0.70-1.30	100-190	45	60	33-145	69-307	71	1723*980*1600	733	G1 1/2"
CPVS75 PM	0.70-0.85	100-123	55	75	45-188	95-399	75	1656*1089*1840	825	G2"
	1.00-1.30	145-189			40-162	85-343				
CPVS95 PM	0.70-0.85	100-123	75	100	53-215	113-456	79	1656*1089*1840	840	G2"
	1.00-1.30	145-189			43-185	92-392				
CPVS100 PM	0.70-0.85	100-123	75	100	58-250	124-530	76	1756*1089*1840	1035	G2"
	1.00-1.30	145-189			48-213	102-452				
CPVS120 PM	0.70-0.85	100-123	90	120	70-300	148-636	76	1756*1089*1840	1065	G2"
	1.00-1.30	145-189			55-255	117-540				

**Unit performance measured according to ISO 1217. Annex C. latest edition and ISO 2151.*

Complete your compressed air installation with an ICONS plan

What if your compressor needs service or an immediate intervention?
With an ICONS plan, you get an alert from your controller delivered straight to your computer, tablet or smartphone. Wherever you are, you can take immediate action and reduce the risk of downtime and other costs.

With connectivity

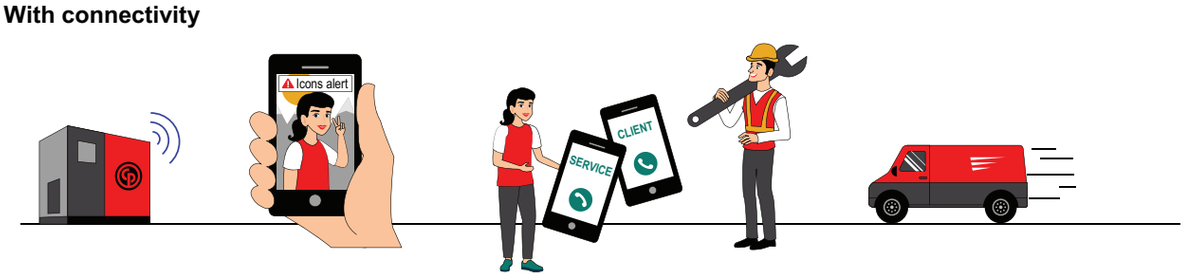

Without connectivity



A TOTAL SOLUTION FOR YOUR QUALITY AIR

Revolutionary Drive Train Technology

Improved energy efficiency saves your money

- In-house designed oil-cooled PM motor with Super Premium Efficiency
- New generation in-house designed screw elements, with improved efficiency
- Integrated direct drive transmission for minimal losses.
- Smart inlet valve optimizes the inlet flow and improves efficiency

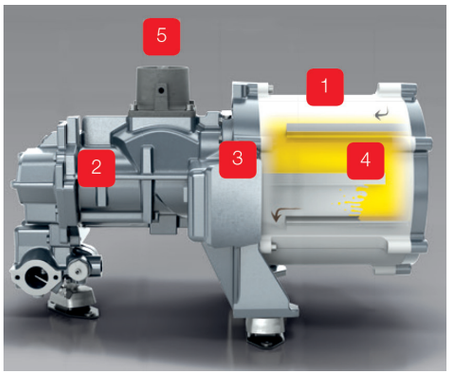

1 Oil-cooled PM motor
2 In-house designed screw elements
3 Direct drive
4 Oil-cooling
5 Smart inlet value

Increased reliability extends lifetime

- Oil-cooled PM motor rated IP66, premium protection against dust and water ingress
- Globally renowned screw elements, proven in thousands of installations.
- Optimal cooling at all speeds and conditions thanks to oil-cooling principle of the oil-cooled PM motor.

Maintenance-free design minimizes downtime and improves your productivity

- Coupling-free direct drive design, no maintenance needed.
- Smart inlet valve, no maintenance needed.

We protect your efficiency

Energy costs represent about 70% of the total operating cost of your compressor over a 5 year period. That's why reducing the operating cost of a compressed air solution is a major focus. Variable frequency driven compressors can cut the energy bill of your compressor by up to 35%.

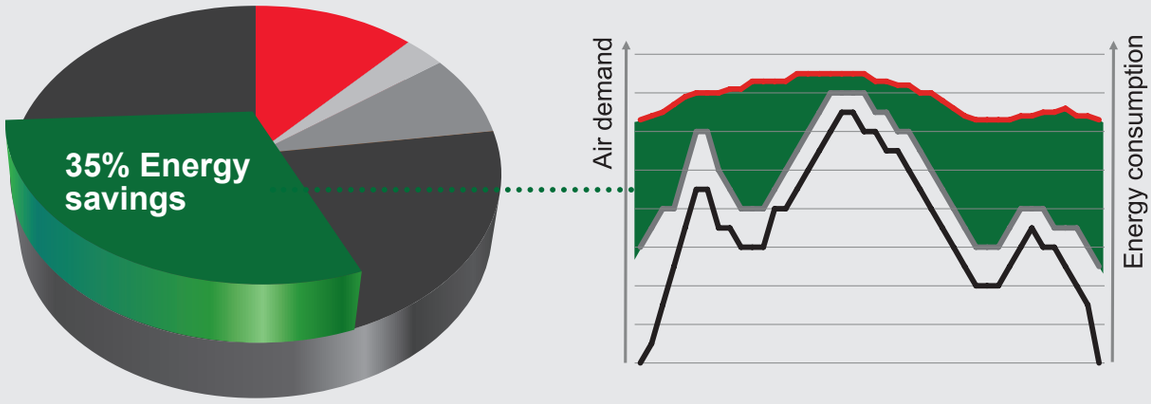

- 12% Investment
- 3% Installation
- 8% Service
- 77% Energy consumption

- Air demand
- Variable frequency driven costs
- Load/Unload costs
- Savings

Air quality

- Automatic drain – ensures no air loss during condensate removal.
- Tropical thermostatic valve – for use in humid and hot conditions.
- High-efficiency air intake pre-filtration panel – avoids dust entering the compression element, protecting internal components and extending the compressor lifetime.
- Refrigerant dryer – removes water condensate from the compressed air, minimizing the risk of product spoilage in your application.

Energy saving

- ECO6i – integrated multiple compressor control for up to 6 compressors reduces system pressure and energy consumption.

Safety

- Water shut-off valve outside the canopy – for water-cooled machines.
- Oil pre-heater – guarantees a certain oil temperature in the oil vessel to avoid condensation.

Compressor Station Layout



Line Filters

- Purify the compressed air by eliminating oil/dust contaminants resulting in higher final product quality and an increase of your overall productivity.

Oil Water Separator

- Captures the oil in compressor condensate so it can be disposed of in an safe and environment-friendly way.

Air Receiver

- Buffer storage for compressed air. Helps with condensate separation, pressure stabilization and more efficient operation of the compressor.

AIRnet

- Fast to install, reliable piping system, designed for compressed air applications offers lowest total cost of ownership.

Chicago Pneumatic

At Chicago Pneumatic we have a passion for performance and long-lasting partnerships. Since 1901, we have been committed to reliability based on technology and trust.



People. Passion. Performance.

For more information, please contact your CP partner:

Use only authorized parts. Any damage or malfunction caused by the use of unauthorized parts is not covered by Warranty or Product Liability.

© March 2023 Chicago Pneumatic. Subject to technical modifications.

www.cp.com