FSCURTIS



COMPRESSED AIR DRYERS
AIR RECEIVERS & ACCESSORIES

eCOOL TECHNOLOGY

ISO 9001:2008 CERTIFIED

BUILT FOR TODAY

COMMITTED TO TOMORROW

Refrigeration Air Dryers

HEAT EXCHANGER WITH MOISTURE SEPARATOR
Our Heat Exchanger comprises of Pre cooler, Evaporator and built in Stainless Steel demister moisture separator.
Cross flow type Pre cooler (air to air heat exchanger) and evaporator (air to refrigerant heat exchanger) ensure more cross sectional area for flow to make it non-clogging. Heat exchanger is designed to have better turbulence & maximized heat transfer rate.
Lesser difference in temperature between Inlet Air & Outlet Air ensures better effectiveness. Piping is completely eliminated and the air passage is non-ferrous.
The heat exchanger assembly is encapsulated by PUF Insulation (Eco friendly) to prevent the loss of cooling effect.



Non-Cyclic Refrigeration System:

HOT GAS BY-PASS Value automatically maintains dew point temperature across a wide range of load and ambient conditions without the need for any adjustments. High pressure, high temperature refrigerant vapor is introduced after the expansion value to ensure temperature control.

Automatic Condensate Drain

Adjustable electronic timer controlled: Pilot operated / direct: compressed air powered Auto drain valve. Positive discharge of heavily contaminated condensate.

Ease Of Installation:

All dryers are shipped pre-piped and wired, ready to install and operate. Installation is made easy with conveniently located Air and Drain connections.

Environmental:

FS CURTIS DRYERS are designed to have low energy usage, helping to conserve the Earth's Resources and minimize pollution.
Refrigerants are with zero ozone depletion factor, and thereby making FS CURTIS dryers' 'OZONE FRIENDLY'.

Medical Breathing Air Dryers

FS CURTIS medical dryers deliver a dewpoint of below 0°C as mandated by NFPA 99. The FS CURTIS medical dryers operate with the principle of Pressure Swing Adsorption, hence removing more moisture than refrigeration air dryers, and delivers moisture free dry air consistently irrespective of flow variation.

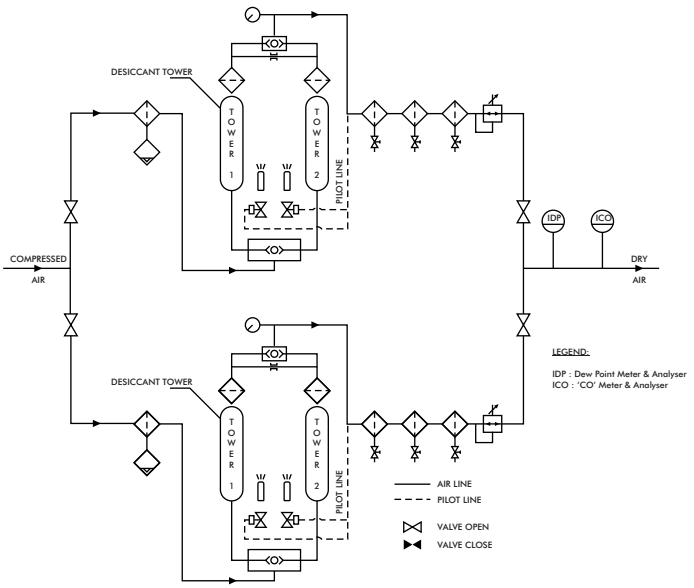



Based on medical application criticality, the package comes with one working and one stand by dryer. So there is no need to stop the air dryers for maintenance. Purge saving system saves purge air upto 60% for a typical hospital load of 30% to 40%. Dewpoint and CO monitor enables to monitor dewpoint and CO levels as mandated by NFPA 99.

Desiccant Compressed Air Dryers

FS CURTIS air dryer offers total drying solution for compressed air.

Drying Cycle: Moist air from the compressor is sent through the coalescing filter where water and oil coalesce and get purged through the auto drain valve. The relatively clean and moist air passes through the drying tower filled with desiccantand gets completely dried up to the desired dew point. The desiccant fines, if any, are completely removed through a built in after filter.



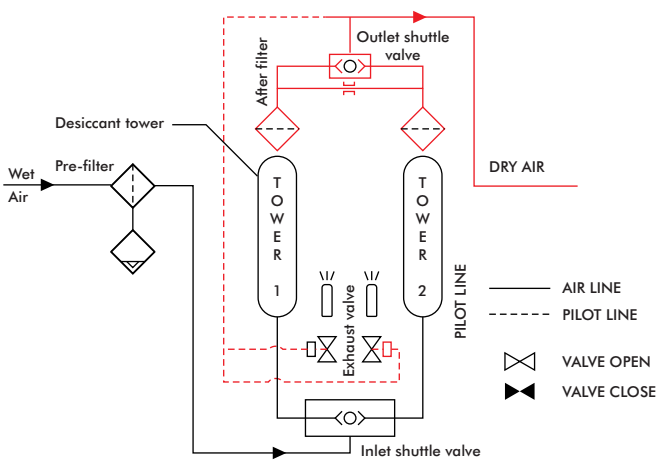

Regeneration Cycle: During this cycle, the sudden depressurization brings out water molecules trapped in the desiccant pores to the surface of the beads. A small portion of the dry compressed air from the drying tower then passes over the desiccant through the regeneration orifice, to ensure complete regeneration of the desiccant.

Medical Dryers Specification

Model	Flow	Dimensions
	cfm	HxWxD-mm
MD 10	10	600x840x600
MD 20	20	600x1050x780
MD 30	30	810x1050x780
MD 45	45	1055x1050x780
MD 60 A	60	1250x1250x855
MD 100	100	1540x1245x900
MD 200	200	1540x1350x1300

Operating Conditions

- Electrical: 85-265V/1 Ph/50/60 Hz
- Minimum working pressure: 4 bar g
- Maximum working pressure: 16 bar g
- Maximum inlet air temperature: 45°C



DRC Compact Desiccant Dryers Specification

Model	Flow	Dimensions	Weight
	scfm	HxWxD-mm	KGS
DRC 10	10	1038x330x150	21
DRC 20	20	963x371x213	29
DRC 30	30	1227x371x213	39
DRC 45	45	999x497x313	49
DRC 60	60	1192X523x313	61
DRC 100	100	1603x439x372	106
DRC 125	125	1913x439x372	119
DRC 200	200	1615x449x582	214
DRC 250	250	1925x449x582	238
DRC 300	300	1615x457x764	256
DRC 375	375	1925x457x764	286

- Maximum Working Pressure: 16 kg / cm2
- Air Inlet Condition: Maximum Fluid Temperature 45°C
- Pre-filter rating: 0.3 Microns (Coalescer)
- Cycle Time: 4 Minutes
- Regeneration Volume: 10%
- Air Outlet Conditions: Dry air at -40°C Dew Point
- Operating Voltage: 85-265V 50/60hz 1 Ph

psi g	60	80	100	120	140	160	180
bar g	4.1	5.5	6.9	8.3	9.7	11	12.4
Factor	0.65	0.83	1	1.18	1.37	1.52	1.7

°F	90	95	100	105	110	115	120
°C	32	35	38	41	43	46	49
Factor	1.35	1.16	1	0.85	0.74	0.64	0.56

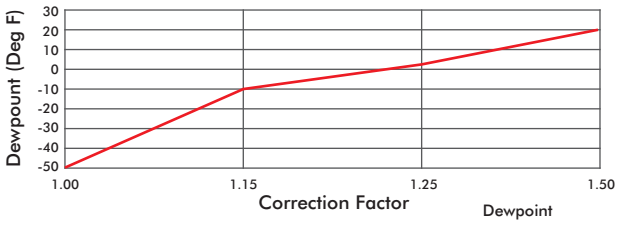

DR Desiccant Dryers Specification

Model	Flow	Dimensions	Weight
	scfm	HxWxD-mm	KGS
DR 400	400	1810x1200x1300	850
DR 458	458	1810x1200x1300	850
DR 500	500	1830x1300x1300	950
DR 572	572	1830x1300x1300	950
DR 750	750	1975x1500x1500	1265
DR 860	860	1975x1500x1500	1265
DR 1000	1000	2100x1500x1500	1575
DR 1144	1144	2100x1500x1500	1575

- Requirement:
- Flow Volume: 375 cfm
- Working Pressure: 6 Kg / cm2
- Inlet air Temperature: 45oc
- Referring the Graphs: Factor (T) = 0.9 Factor (P) = 0.88

Dryer capacity required :

$$\frac{\text{Flow volume}}{\text{Factor (T) x Factor (P)}} = \frac{375}{0.9 \times 0.88} = 474 \text{ cfm}$$

Choose the nearest higher model i.e, Model DP 500

Temperature correction factor

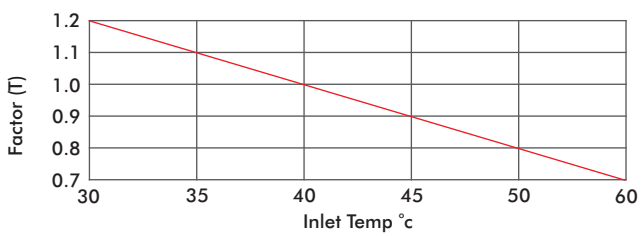

Pressure correction factor

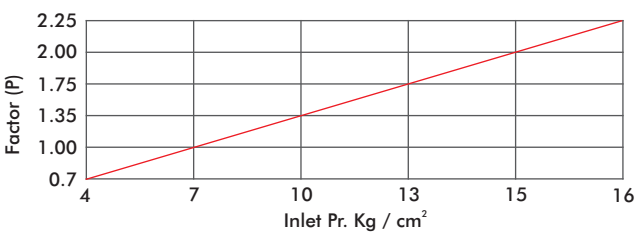

Refrigeration Air Dryers

Model	Model Variance			Nominal Capacity	Maximum Pressure	Electrical Connection	Air Connection	Dimensions	Net Weight
	B	E	F	cfm	bar g		In / Out	LxWxH-mm	kg
CR 20	✓			20	16	220V/ 1ph/50Hz	½"BSP(F)	360X500X500	45
CR 40	✓			40	16		½"BSP(F)	360X500X500	47
CR 60	✓			60	16		1"BSP(F)	450X600X695	80
CR 80	✓			80	16		1"BSP(F)	450X600X695	85
CR 100	✓			100	16		1"BSP(F)	700X700X920	120
CR 150	✓			150	16		1½"BSP(F)	700X700X920	130
CR 200	✓			200	16		1½"BSP(F)	700X700X920	140
CR 250	✓			250	16	415V/ 3ph/50Hz	2"BSP(F)	900X900X1230	160
CR 300	✓			300	16		2"BSP(F)	900X900X1230	160
CR 400	✓			400	16		2"BSP(F)	750X1000X1400	180
CR 500	✓			500	16		2"BSP(F)	750X1000X1400	225
CR 600	✓			600	16		2"BSP(F)	750X1000X1400	250
CR 750		✓	✓	750	16		3"NB ASME Flg	900X1300X1625	300
CR 1000		✓	✓	1000	16		3"NB ASME Flg	900X1300X1625	350
CR 1250		✓	✓	1250	16		4"NB ASME Flg	900X1200X1725	425
CR 1500		✓	✓	1500	12.5		5"NB ASME Flg	1300X1800X1900	650
CR 2000		✓	✓	2000	12.5		6"NB ASME Flg	1300X1800X1900	800
CR 2500		✓	✓	2500	12.5		6"NB ASME Flg	1300X1800X1900	850

Filters for higher operating pressure upto 50 (bar g) available on request

Flow capacities in accordance with ISO 7183, air suction of FAD 20°C (68°F), 1 bar (14.5 psi) at the operating conditions mentioned below Voltage range for 200 to 240V for 1ø & for 380 - 440V for 3ø. Any other voltage may affect durability of product.
Rated power is the max power consumed at conditions as per ISO 7183
Option 2
NOTE: Models upto 600 cfm are with Reciprocating type refrigeration compressors. Scroll type compressors / Reciprocating type compressors for models from 750 cfm and above

Sizing Conversion Factors:

Operating condition

	Rated / Ideal	Maximum
Inlet Temperature:	45° C	60° C
Ambient Temperature:	40° C	50° C
Inlet Pressure:	7 bar (g)	16 bar (g)
Pressure Dew Point:	3° C	16 bar (g)

$$\text{Dryer Nominal Capacity} = \frac{\text{Compressor Actual Capacity}}{C1 \times C2 \times C3 \times C4}$$

Inlet Temperature: (C1)

Inlet Temperature, °C	30	35	40	45	50	55	60
Conversion Factor	1.2	1.15	1.05	1.0	0.85	0.8	0.7

Inlet Pressure: (C3)

Inlet Pressure	bar g	4	5	6	7	8	9	10.5	11	12.5	13	14	15	16
	psi g	58	73	87	100	116	131	150	160	180	189	200	218	232
Conversion Factor		0.75	0.85	0.95	1.00	1.06	1.11	1.15	1.18	1.20	1.22	1.23	1.25	1.28

Ambient Temperature: (C2)

Inlet Temperature, °C	25	30	35	40	45	50
Conversion Factor	1.2	1.14	1.1	1.0	0.9	0.8

Pressure Dew Point (C4)

Pressure Dew Point, °C	3	7	10
Conversion Factor	1.0	1.15	1.3

Compressed Air Filters

High efficiency filtration for clean & technically oil-free compressed air

Filter Model	Pipe Size	Capacity at 7 bar g		Approx Weight (kg)	Dimensions (mm)				
		m^3/min	cfm		A	B	C	D	E
FFA05	G1/2	0.66	32	1.34	85	154	24	60	41
FFA08	G1/2	0.96	34	1.45	85	195	24	75	41
FFA10	G1/2	1.32	47	1.46	85	195	24	90	41
FFA15	G3/4	1.98	70	1.72	85	255	24	90	41
FFA20	G1	3.30	116	4.1	132	285	43	135	41
FFA40	G1 1/2	5.70	201	4.52	132	385	43	235	41
FFA60	G1 1/2	9.00	318	5.01	132	485	43	335	41
FFA75	G1 1/2	13.32	470	7.45	132	685	43	525	41
FFA125	G2	17.46	616	10.53	161	687	55	520	140
FFA175	G2 1/2	26.16	923	12.58	161	930	55	770	140
FFA250	G3	37.50	1324	29.15	252	975	79	610	140
FFA300	G3	46.62	1645	32.29	252	1057	79	760	140

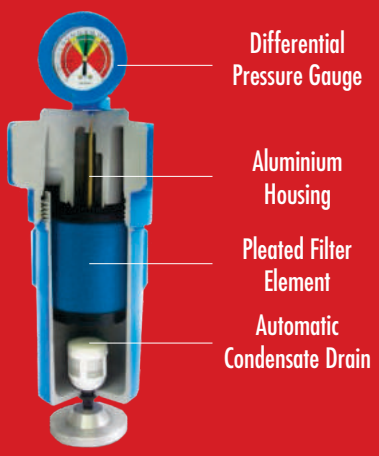

FS CURTIS reserves the right to change specifications without prior notice.

- Maximum recommended operating temperature 600C
- Minimum recommended operating temperature: 10C
- Material for FFA threaded type filters is aluminium.
- Filters come complete with auto drain (16 bar) or manual drain (50 bar)
- Filters are suitable for a working pressure for 16 bar(g). Filters upto 50 bar(g) are available on request

Filter Grade	Particle Removal Down To	Oil Removal Down To	Nominal Initia Pressure Drop
P	3 micron	–	0.03 bar g
U	1 micron	0.1 mg/m^3	0.05 bar g
H	0.01 micron	0.01 mg/m^3	0.09 bar g
C	–	0.003 mg/m^3	0.10 bar g

Pressure	1	2	3	4	5	6	7	8	9	10	11	12	13	14	15	16
Factor	0.25	0.38	0.5	0.65	0.75	0.88	1.0	1.13	1.25	1.38	1.51	1.63	1.75	1.88	2.0	2.13

FS Compressors India Pvt. Ltd.
(Formerly : FS CICB Compressors Pvt. Ltd)
Gat No.357/17/2 & 357/18 | Waghjainagar
Ambethan Road | Kharabwadi | Taluka- Khed |
Dist- Pune, Maharashtra - 410501
Tel: +91-21-35278312 | Website: www.fscurtis.in |
Email : info@fscurtis.in